BL-PKL-200W-120-III-50K-D-P

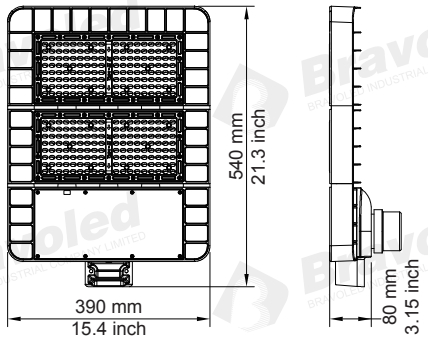

Driver Info		LED Info	
Type:	Constant Current	Watts:	200W
120V:	Yes	Color Temp:	5000K
277V:	Yes	Color Accuracy:	70CRI
480V	N/A	L70 Lifespan:	50000
Input Watts:	200W	Lumens:	25000
Efficiency:	96%	Efficacy:	125LPW

Specification parking lot light available in IES Type III distributions. For use in parking lots. Roadways, pathways and general area lightings. 5-years warranty.

Color: Bronze

Weight: 14.9lbs(6.75Kg)

Technical Specifications

Listings

ETL Listing:

Suitable for wet locations.
ETL code: 4007551

DLC Listed

This product is on the Design Lights Consortium(DLC) Qualified Products List and is eligible for rebates from DLC Member Utilities.

IESNA LM-79 &IESNA LM-80 Testing:

This product has been tested by an independent laboratory in accordance with IESNA LM-79 and 80, and have received the Department of Energy" Lighting Facts" label.

Electrical

Driver:

Constant Current, Class 2, 110-277Vac,50/60HZ, 0.95Amp@100Vac,Inventronics Brand.

THD:

<20%

Power Factor:

>0.95

Dimming Driver:

Driver includes dimming control wiring for 0-10V dimming systems, Requires separate 0-10V DC dimming circuit, Dims as low as 10%.

Photocell:

This product is equipped with socket for photocell.

Surge Protection:

6kV

LED Characteristics

Lifespan:

50,000-hour LED lifespan based on IES LM-80 results and TM-21 calculations.

LEDs:

Long-life,high-efficiency SMD3030, patent free.

Color Stability:

Comply with DLC's requirements.

Color Uniformity

CCT(Correlated Color Temperature) follows the guidelines of the American National Standard for Specifications for the Chromaticity of Solid State Lighting(SSL) Products, ANSI C78.377-2015.

Construction

IES Classification:

Type Ⅲ Distribution.
Optional of Type Ⅳ and Type Ⅴ by different Models.

Cold Weather Starting:

Minimum starting temperature is -40ºF(-40ºC)

Ambient Temperature

Suitable for use in 104ºF(40ºC) ambient Temperatures.

Housing:

Precision die-cast aluminum housing.

Lens:

Clear acrylic lens with integrated optics

Mounting:

Mounts to aquare poles, round poles or wall etc. by different type of adaptors.

IP Rating:

Wet Location.

Gaskets:

High Temperature silicone gaskets.

Finish:

Formulated for high-durability and long lasting color.

Green Technology:

Mercury and UV free RoHS compliant components Polyester powder coat finish formulated without the use of VOC or toxic heavy metals.

Other

5 Yr Limited Warranty:

Fixture operation and paint finish are covered for a period of 5 years.

Accessories options:

Photocell
Shorting cap
Mounting adaptors type A/B/C/F

BL-PKL-200W-120-III-50K-D-P

Bravoled
BRAVOLED INDUSTRIAL COMPANY LIMITED

Order Information

BL	PKL	Wattage	Input Voltage	IES Type III/IV/V	CCT	D/N	P/N
BL	PKL	**100W**	**120**: 110-277Vac	**III**: TYPE III	**40K**: 4000K	**D**: Dim(0-10V)	**P**: W/ Photocell Socket
		150W	**480**: 277-480Vac	**IV**: TYPE IV	**50K**: 5000K	**N**: No dim	**N**: W/O Photocell Socket
		200W		**V**: TYPE V	**57K**: 5700K		
		240W					
		300W					

BL	PKL						
BL	PKL						

Accessories

Photocell Options:

Photocell

Shorting Cap

Mounting Adaptor Options:

Type A:Slip Fitter

Type B:Square or Round Pole Mount

Type C:Trunnion

Type F:Wall Mount

Lux Chart/Photometrics

Type III

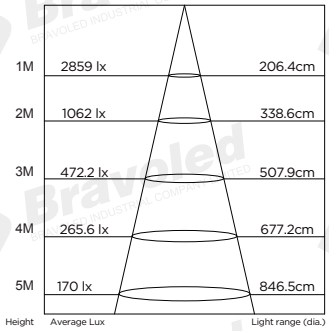

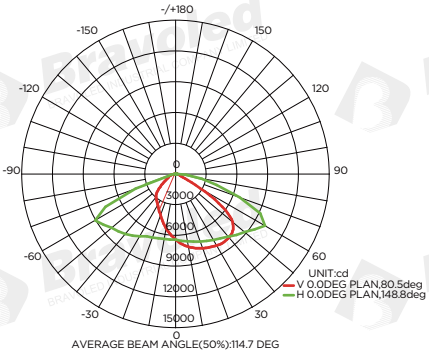

AVERAGE BEAM ANGLE(50%):114.7 DEG

Type IV

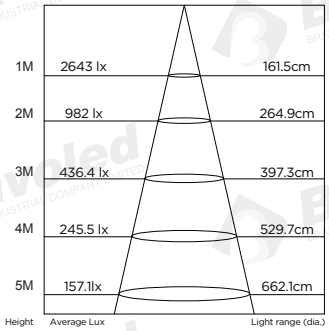

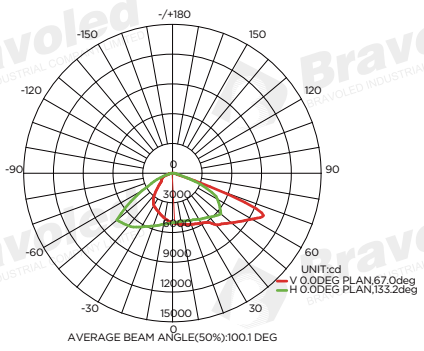

AVERAGE BEAM ANGLE(50%):100.1 DEG

Type V

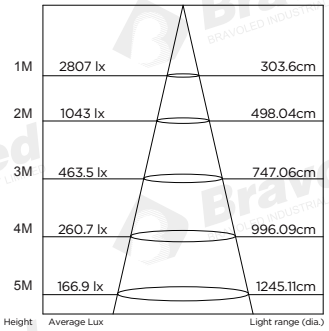

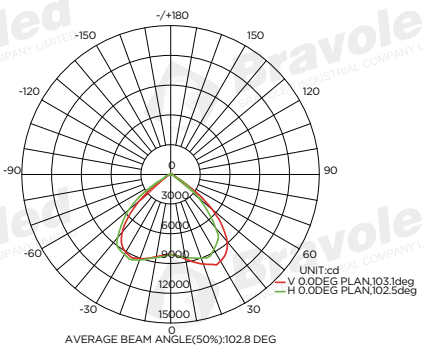

AVERAGE BEAM ANGLE(50%):102.8 DEG

Installation Options

A:Slip Fitter

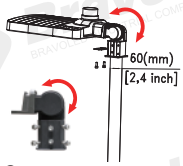

C:Trunnion

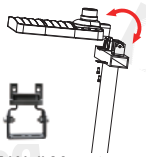

B:Square or Round Pole Mount

F:Wall Mount

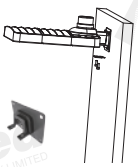

Installation Steps

1.Install mount bracket on to pole

2.Set fixture on to mount bracket

3.Wire and tighten screws

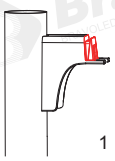

1

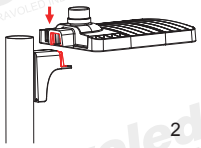

2

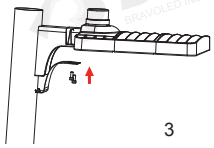

3

Packaging

1pcs/CTN G.W.:9.47 kg
Dimension: 26.8"L x 16.9"W x 5.5"H (680mm x 430mm x 140mm)

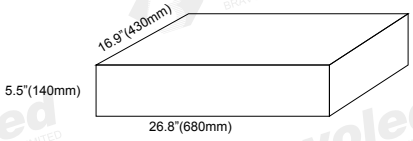

40'hq	1583 pcs
40'gp	1400 pcs
20'gp	680 pcs